ECE 212 Fall 2025 Design Project – Final Report

Preliminary Results 1 – Due 10/30/25

Preliminary Results 2 – Due 11/6/25

Final Report – Due 12/12/25

Introduction:

The goal of this project is to fully analyze and design an active high-Q bandpass filter circuit consisting of three operational amplifier stages with feedback. You will then combine two of these filters to create a very simple audio equalizer. An audio equalizer allows the amplitudes of certain frequencies in a signal to be controlled individually to emphasize different sounds, instruments, etc. This can also filter out unwanted signals. Our equalizer will not be very sophisticated but will provide a proof of concept.

You should do Parts A and B of this project individually as if this is a take-home exam; the final part of the project and the final report will be done with a partner (if you complete Parts A and B satisfactorily in a timely manner). Be sure to follow all the directions carefully and include all required components in your report! You will be using both MATLAB and LTspice for this project.

Your center frequency (f_0) will be unique and determined by the last 4 digits of your BSU ID number. If your frequency begins with a '0,' then replace it with '10.' For example,

1 1 4 0 0 $\underline{3}$ $\underline{3}$ $\underline{0}$ $\underline{5}$ → $f_0 = 3305\ \mathrm{Hz}$

1 1 4 0 0 $\underline{0}$ $\underline{3}$ $\underline{0}$ $\underline{5}$ → $f_0 = 10305\ \mathrm{Hz}$

Do not share your full BSU ID in this report; just include the frequency. The gain will be set to 5 V/V and the quality factor (Q) will be 10.

The bandpass filter will be composed of 3 stages. The complete circuit is shown in Figure 1. The individual stages are shown in Figure 2. (You are welcome to use the schematics in your report, but make sure to cite this document as a source if you do this.)

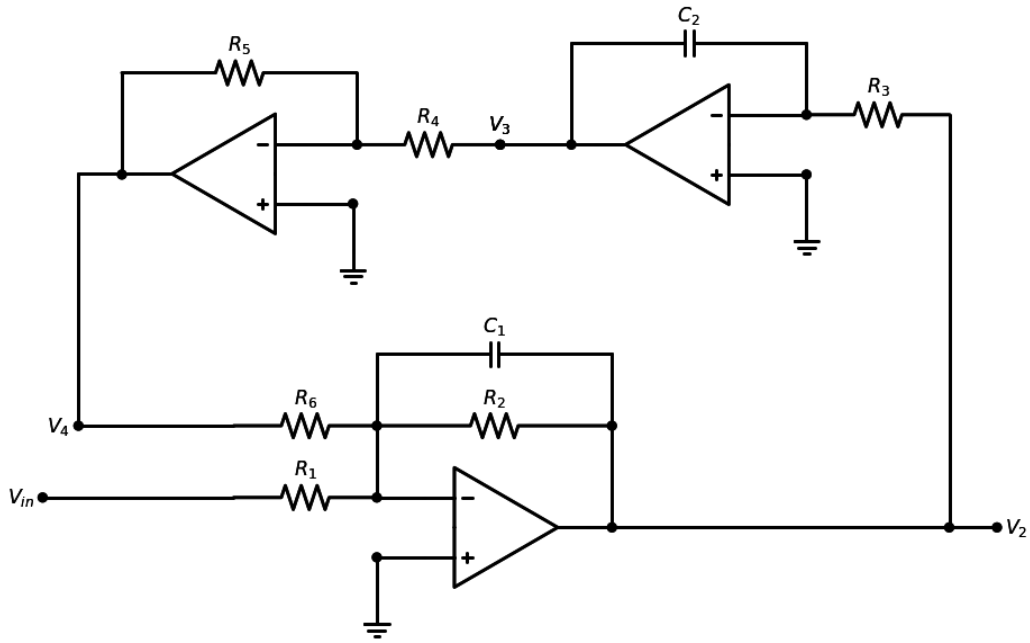

Figure 1: Bandpass filter circuit

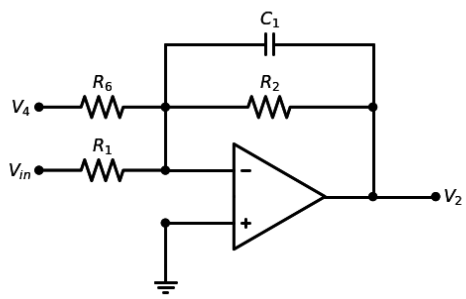

(a) Stage 1

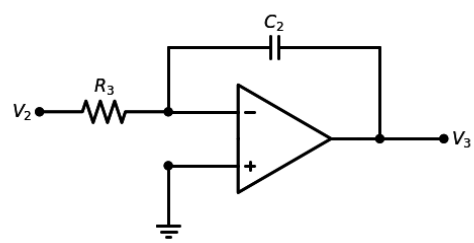

(b) Stage 2

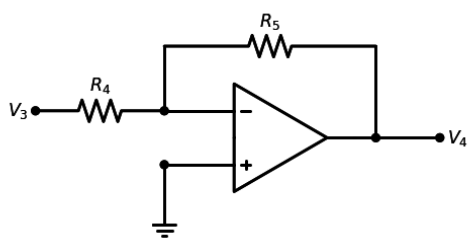

(c) Stage 3

Figure 2: Individual stages of the bandpass circuit

Part A: Bandpass Transfer Function and Design

Analyze the bandpass filter in Fig. 1. Make the simplification that $C = C_1 = C_2$ for this entire project. For all final expressions, make sure to simplify your results; do not leave expressions such as $R||\frac{1}{j\omega C}$ in your boxed answers. **Include the following information in your report. Make sure to number it, write or type clearly, and make your report easy to follow for full credit.**

1. Using techniques developed in class, derive the general transfer function for Stage 2 $H_2(j\omega) = V_3/V_2$ for the circuit shown in Fig. 2(b) (in terms of $j\omega$, R_3, and C). Make sure to box the final transfer function and show all work clearly.
2. Using techniques developed in class, derive the general transfer function for Stage 3 $H_3(j\omega) = V_4/V_3$ for the circuit shown in Fig. 2(c) (in terms of $j\omega$, R_4, and R_5). Make sure to box the final transfer function and show all work clearly.
3. Using techniques developed in class, derive the general transfer function for Stage 1 $H_1(j\omega) = V_2/V_{in}$ for the circuit shown in Fig. 1 (in terms of $j\omega$, R_1, R_2, R_3, R_4, R_5, R_6 and C). Recognize that this is a summing amplifier with an output voltage V_2 that is dependent on V_4 and V_{in}. Use your derivations for the other stages in this derivation. Make sure to box the final transfer function and show all work clearly.
4. Now, make some simplifying assumptions. Set $R_U = R_4 = R_5$ to give a gain of unity, and set $R = R_3 = R_6$. Simplify your expression. Then, rewrite your expression for $H_1(j\omega)$ in the following format:
$$H(j\omega) = \frac{j\omega K\beta}{(j\omega)^2 + j\omega\beta + \omega_0^2} \tag{1}$$
Write expressions for K, β, and ω_0 in terms of a subset of the variables $j\omega$, R_1, R_2, R, R_U, and C. Make sure to box in these expressions and show all work clearly.
5. Write an expression for the quality factor (Q) in terms of a subset of the variables $j\omega$, R_1, R_2, R, R_U, and C. Make sure to box in this expression and show all work clearly.
6. Write a summary of the circuit specifications. Box in the numeric values for the center frequency (f_0), the quality factor (Q), the gain, and the bandwidth (β) that the design requires. (See the beginning of the document for most of these; you will need to look up the equation relating the bandwidth and the quality factor.) Show all work clearly.
7. Now, design the circuit based on the values specifications in the previous step. Choose the capacitor to be $C = 0.01\ \mu F$. Use your boxed expressions for Q, K, and ω_0 to calculate R_1, R_2, R. Choose a value between R_2 and R for R_U. Box in your values R_1, R_2, R, R_U, and C and show all work clearly.
8. Now make sure your expression works in MATLAB. Using your chosen values for $j\omega$, R_1, R_2, R, R_U, and C, plug them into your transfer function $H_1(j\omega)$ and plot it as a Bode diagram in MATLAB. Include all work/algebra used to create your MATLAB expressions. (Use the techniques you have used in the homework.) Include the MATLAB expressions you used to generate your plots and include two MATLAB Bode plots in your report:
    a. Show the center frequency by clicking on the point at the center frequency; make sure the magnitude is correct (https://www.mathworks.com/help/matlab/creating_plots/interactively-explore-plotted-data.html).

b. Show that the bandwidth is correct. Explain (using equations) what you expect your bandwidth to be and mark those points on the second plot (making sure the frequency and magnitude is correct). (Again, use data tips explained in the link above.)

Part B. LTspice Analysis

Now you will build your filter in LTspice and verify the filter functions as expected. The values you use for this part of the project are based on your Part A calculations and design. (If you made a mistake in Part A, you can redesign your filter. Make sure to include a revised Part A with this report if you change your design.) **Include the following information in your report. Make sure to number it, write or type clearly, and make your report easy to follow for full credit.**

1. Using LTspice, create a schematic of Figure 1 using your design. Include the schematic in your report. You will use the LM741 model.
    a. You need to have an include statement for the op-amp: `.include C:\pathname\LM741.lib`, as well as the analysis statement. The LM741 op-amp model can be downloaded from the course Canvas site in the 'Design Project' module, and '`pathname`' is the location in which the file is downloaded on your computer. You also have to make sure the simulation actually uses this model, which is done by placing a symbol like 'Opamp2' in the 'components' menu, right clicking on it, and setting the 'Value' variable to 'LM741'.
    b. All voltage nodes must be clearly labeled.
2. Plot the gain using AC analysis. Use an AC voltage source of 1V so your output (V_2) is the same as the gain (since then $V_2/V_{in} = V_2/1 = V_2$). Plot the response from 20 Hz to 20 kHz. Using the cursors, show in two separate screenshots that:
        i. The bandwidth is as expected (both frequency and magnitude). Make sure to explain why these cursors indicate the bandwidth is correct.
        ii. The center frequency is as expected (both frequency and magnitude)
3. Compare your AC analysis LTspice plots to your MATLAB plots from Part A, Step 8. Make sure they match. If they don't match, something is wrong and you'll need to figure out what is wrong. Once they match, put both sets of plots into your report and highlight their common characteristics. **Be careful about the axes; MATLAB shows units of [rad/s] and LTspice shows units of [Hz] by default. It is okay if the axis are different, but show calculations proving the results are (roughly) the same.**
4. Using MATLAB, run the script 'generate_noisy_signal_1freq.m' found in the 'Design Project' module on Canvas. In this file, the only value you need to modify is your specific center frequency "f1" (in Hz as indicated in the file). When you run the file, it generates a very noisy looking signal that you will use in your later LTspice simulation. The script plots the signal, and it will also create a text file in the current run directory called 'One_Signal_Vin.txt'. Download this file to your computer. Please write "One_Signal_Vin.txt is downloaded" next to "3" in your report; nothing else is required.
5. Use the noise file you generated in MATLAB on the previous step as an input to a transient simulation in LTspice. Right click on your voltage source, select "PWL FILE" and click "Browse" to locate the downloaded file ('One_Signal_Vin.txt') as your input. The transient simulation must run the entire length of the input file. Plot the input (V_{in}) and the output (V_2). The period corresponding to the center frequency is shown with cursors on the plot of V_2. These can be on

one graph or on two separate graphs. Include the plot(s) and a brief analysis of the plot(s) in your report.

Part C. Equalizer Design and Report

Now, assuming you completed Parts A and B satisfactorily and on time, you will be assigned a partner for the remaining part of the project. With your partner, you will combine your filters to create an equalizer (EQ). This will be a very simple EQ with only two controllable frequencies. (If you do not have a partner of if your filter and your partner's filter are less than 2 kHz different, use your current design – or your partner's current design – and create a new design that is 2 kHz greater the center frequency you used for Parts A and B.) Usually an equalizer will filter at specific intervals, such as 1/3 of an octave, but we won't worry about that for this project.

An equalizer allows someone to adjust the volume of various frequencies in audio recording. A full equalizer would have many filters to allow the reduction of unwanted noise and the ability to make certain frequencies more prominent. Our very simple equalizer is in Figure 3. It consists of a 20 kΩ potentiometer (to control the strength of the signal at a given frequency; think of this as a knob or slider you adjust in a sound studio), a capacitor (to block any DC signals that are present), and a resistor connected to the output of each bandpass filter (to ensure there is adequate resistance in the path for the amplifier to act as desired regardless of the wiper position). These are then connected to a simple op-amp acting as a summing amplifier. You will need the output voltage V_{out} to have a gain of 5 V/V if the wiper of the potentiometer is directly in the center. Depending on the position of the wiper, each frequency will be individually controlled and summed for your final output.

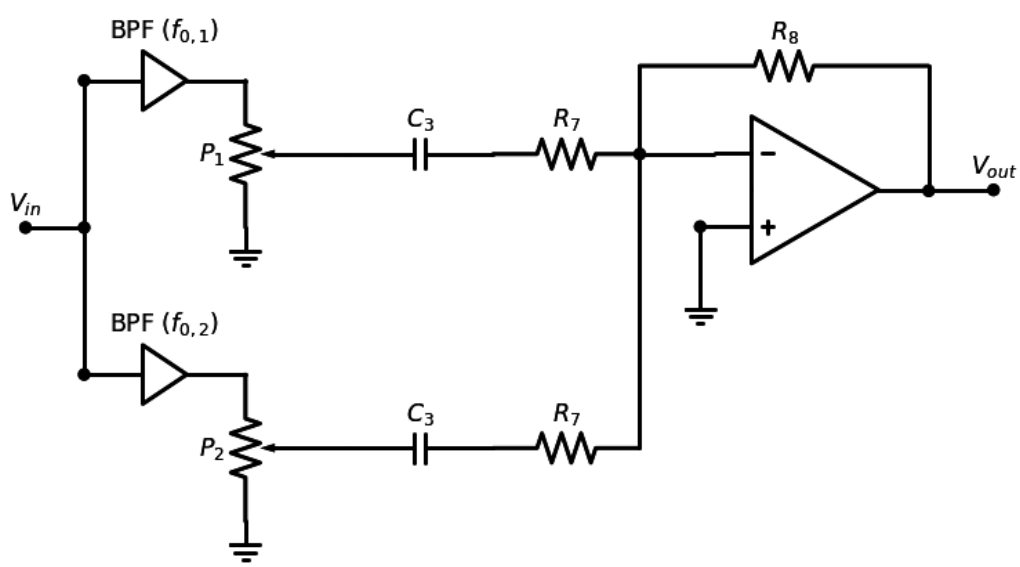

Figure 3: Equalizer circuit. Each bandpass filter (BPF) represents Figure 1.

The following will be in your final report (the details on the final report are under the heading "Final Report"):

1. Create the schematic in LTspice and include it in your report. **Use UniversalOpAmp2 instead of the LM741 for the entirety of Part C.**

a. Model each potentiometer as two resistors, with a variable (below shown as W and set to a value $0 < W < 1$) representing the wiper position:

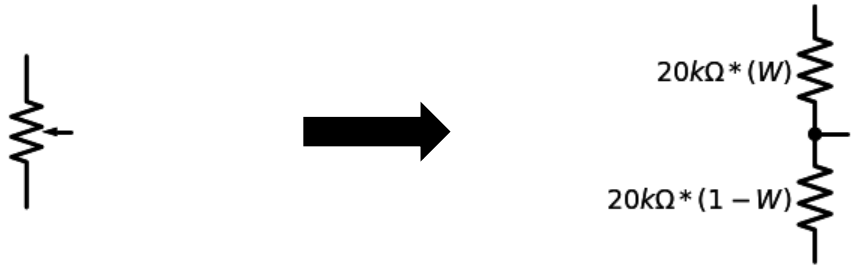

b. Give each potentiometer a separate wiper parameter so you can control the strength of each frequency individually.

2. Choose your resistors. The capacitor can be set to $C = 0.1\ \mu F$. Use your knowledge of the transfer function and how resistances combine to select R_7 and R_8 to meet the specification for V_{out} to have a gain of 5 V/V if the potentiometer's wiper is directly in the center (i.e. $W = 0.5$). Clearly write your R_7 and R_8 values.
3. Plot the AC analysis showing that if your wiper parameters are each set to 0.5, the gain is 5 V/V at your two center frequencies.
4. Plot the AC analysis of two more conditions for the wiper positions that you find interesting. Include these plots in your report along with a discussion about what is happening. The wiper positions should differ for each potentiometer.
5. Open the file 'generate_noisy_signal_2freq.m' found on Canvas under the "Design Project" module. Replace the frequencies in the file so 'f1' is set to your lower frequency and 'f2' is set to your higher frequency. Run the file in MATLAB. It will generate an output file 'Two_Signal_Vin.txt'. Use that file as the input your source in your LTspice circuit that matches Figure 3. Run a transient simulation with both wipers set to 0.5. Include a single plot in your report showing V_{out} as well as the output from each of the two bandpass filters. Also show the input V_{in}. (There are 4 signals to plot. They can be plotted together or separately; use your best judgement to make them easy to view/understand.) Discuss the output and its accuracy.

Final Report

The final report should have a similar layout to the formal report for ECE 212L. Use the template located on Canvas as a starting point. **Your submission must be a single file.** Everything (including equations) should be typed. Schematics can be hand-drawn if **neatly** done. The schematics in this report can also be used if cited properly. Include the following sections:

1) Title Page. Make sure to include all relevant information (your names, title of project, course name and number, Boise State, submission date, due date, etc. You can use your lab report template as a guide.)
2) Table of Contents (with leading dots to the page number). It should include all sections of the report (from introduction through appendices), including subsections in the technical content and individual entries for each appendix.

3) Introduction. This is much more detailed than in lab reports, with some background. Make sure to discuss what this circuit does in broad terms and not just using math. Make sure to cite any sources you use.
4) Technical content organized with one section for Parts A, B, and C. **Note: use UniversalOpAmp2 instead of the LM741 for all results in your final report. Re-run your results in Part B to use this more ideal op-amp.**
    a. Part A:
        i. Figure 1 (or a recreation of Figure 1) is included. **Make sure to cite this document if you use this figure!** Include a few important equations (such as the final transfer functions, the transfer function in the format of Eq. (1), the equations you used to calculate the resistances and capacitances) and insert them in the manner shown in this document (each equation is centered, on its own line, with its number on the right in parenthesis). Do NOT include your derivations here; derivations should be included in an appendix.
        ii. A table of circuit specification for the bandpass filter. Units are included.
        iii. A table of components chosen for your circuit. Units are included.
        iv. Your MATLAB analysis from Part A including all plots that were required and the discussions detailed in Part A for each plot.
    b. Part B:
        i. LTspice schematic of the bandpass filter
        ii. The AC analysis plots and discussions detailed in Part B
        iii. The transient analysis plots and discussions detailed in Part B
    c. Part C:
        i. Figure 3 (or a recreation of Figure 3) is included. **Make sure to cite this document if you use this figure!** A table of resistor and the capacitor values for the circuit of Figure 3. Units are included.
        ii. LTspice schematic of the equalizer
        iii. 3 AC analysis plots and discussions (as detailed in Part C)
        iv. The transient simulation plot and discussion (as detailed in Part C)
    d. General comments about the design

    You can also add another section or two if it helps you organize your report, but do not add an excessive number of sections.
5) Broader Impacts: these should be short reflections (150-300 words each). You don't need to address every aspect of each outcome and I've tried adding some prompts to get you started. You do need to write 150-300 words on each of the three bulleted outcome:

    ▪ Public health, safety, and welfare. How was safety considered in your design? How can such systems be unsafe? Think about power supply options, limiting current, etc. Does this type of device support health and safety in any way?

    ▪ Economic factors. What is the approximate cost breakdown to manufacture the design? Include only the components you used, and do not worry about the cost of a PCB or manufacturing costs. A typical system likely be far more integrated, but this is a basic cost analysis. Are there potential supply chain issues? What are the costs of these types of systems available commercially, if any are available? Are there any manufacturing constraints?

    ▪ Environmental factors. Are there any issues with the disposal of the design? Does the manufacturing process have a significant environmental impact?

6) Conclusions. The discussion should have all taken place within the technical section. The conclusion should not present new information but summarize what you already wrote and wrap up the report nicely. It should cover all main points of the report.
7) References. Use IEEE-style referencing throughout your report. There are a lot of resources on how to do this online! It is required that you use references. This document should be one of your references.
8) Appendices of your full derivations of the transfer functions, with comments indicating what was done at each step. Make sure everything in the report is typed. You can create schematics used in the derivations in whatever program you want, including LTspice. Make sure to label any nodes relevant to your calculations in schematics within the appendices. Organize the appendices logically. Include at least two appendices. Do not include more than six appendices. These appendices should include all information/calculations from your preliminary reports that were not contained within the body of your report.

Use 12 point font (either Calibri, Arial, or Times New Roman) and line spacing at 1.5 multiple. Make sure all graphs and plots are legible (axis labels have large fonts and lines are distinguishable) and labeled consecutively with captions below the figure. Any tables should also be labeled consecutively with captions above and should never split pages. Given these guidelines, I would expect the total length (<u>not</u> counting title page, table of contents, or appendices) to be at least around 8-10 pages.

All graphs and schematics should have a white background and trace colors that are easy to see. All schematics in the report can be taken from LTspice or from this document (if properly cited). You can set the colors for each trace, the grid, the background, etc. using the Tools > Color Preferences menu. The Tools > Copy Bitmap to Clipboard is probably also pretty handy. You can also change trace colors in your plots by right clicking on the name of the trace. Many of the trace colors do not work well with white backgrounds.

The total of 60 points available for the final report will be broken down approximately as:

- Title page, table of contents, introduction, 5 points
- Technical content (including appendices), 40 points
- Reflection (Broader Impacts), 10 points
- Conclusions and References, 5 points

You will submit one report as a group. The final report MUST be turned in on time! 15 points per day late will be deducted from your grade.